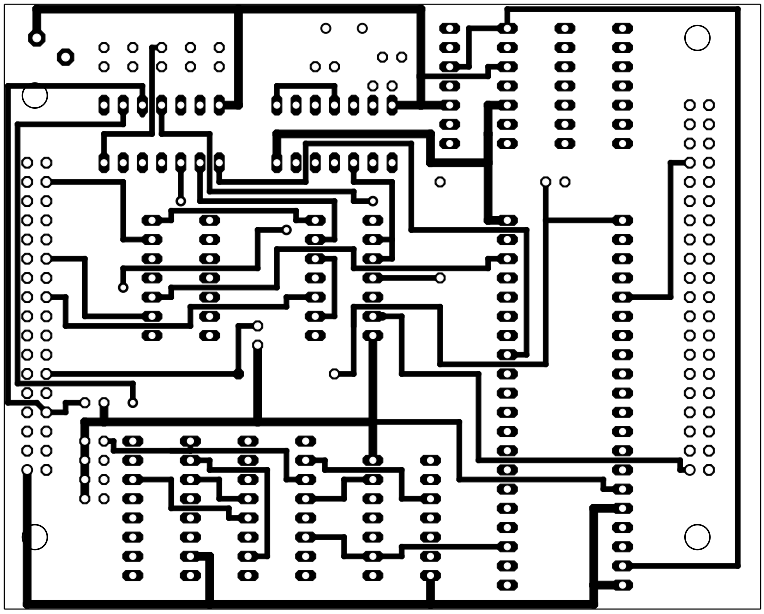

5/04/2003 16:12:14 mirrored /home/jose_leandro/eagle/prueba/untitled.brd